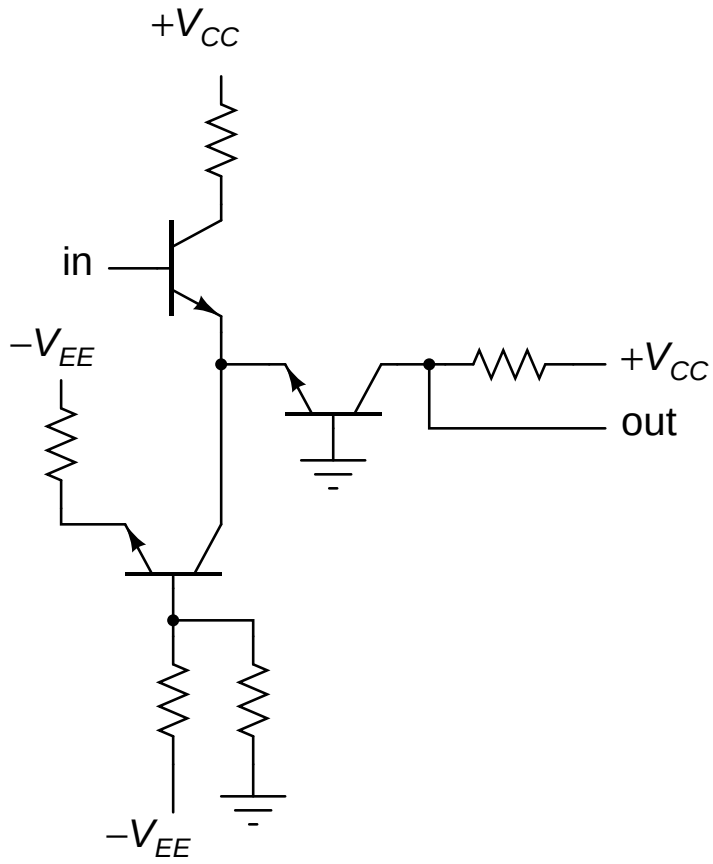

don't

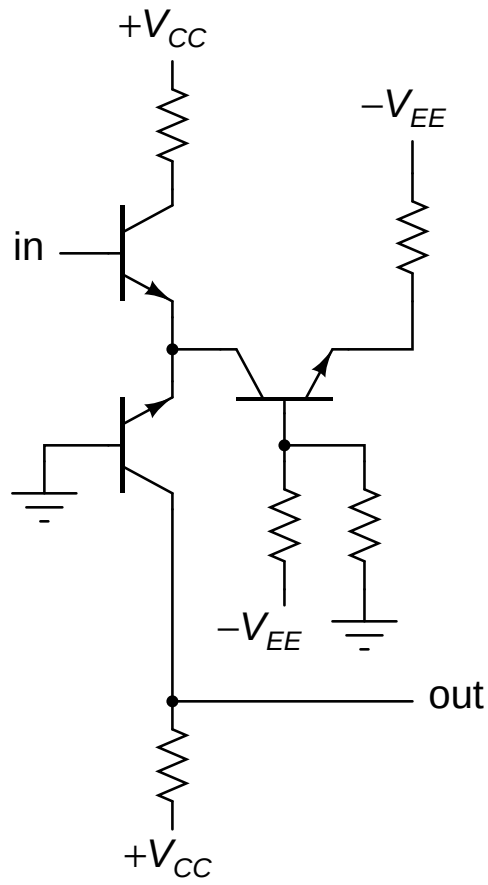

don't