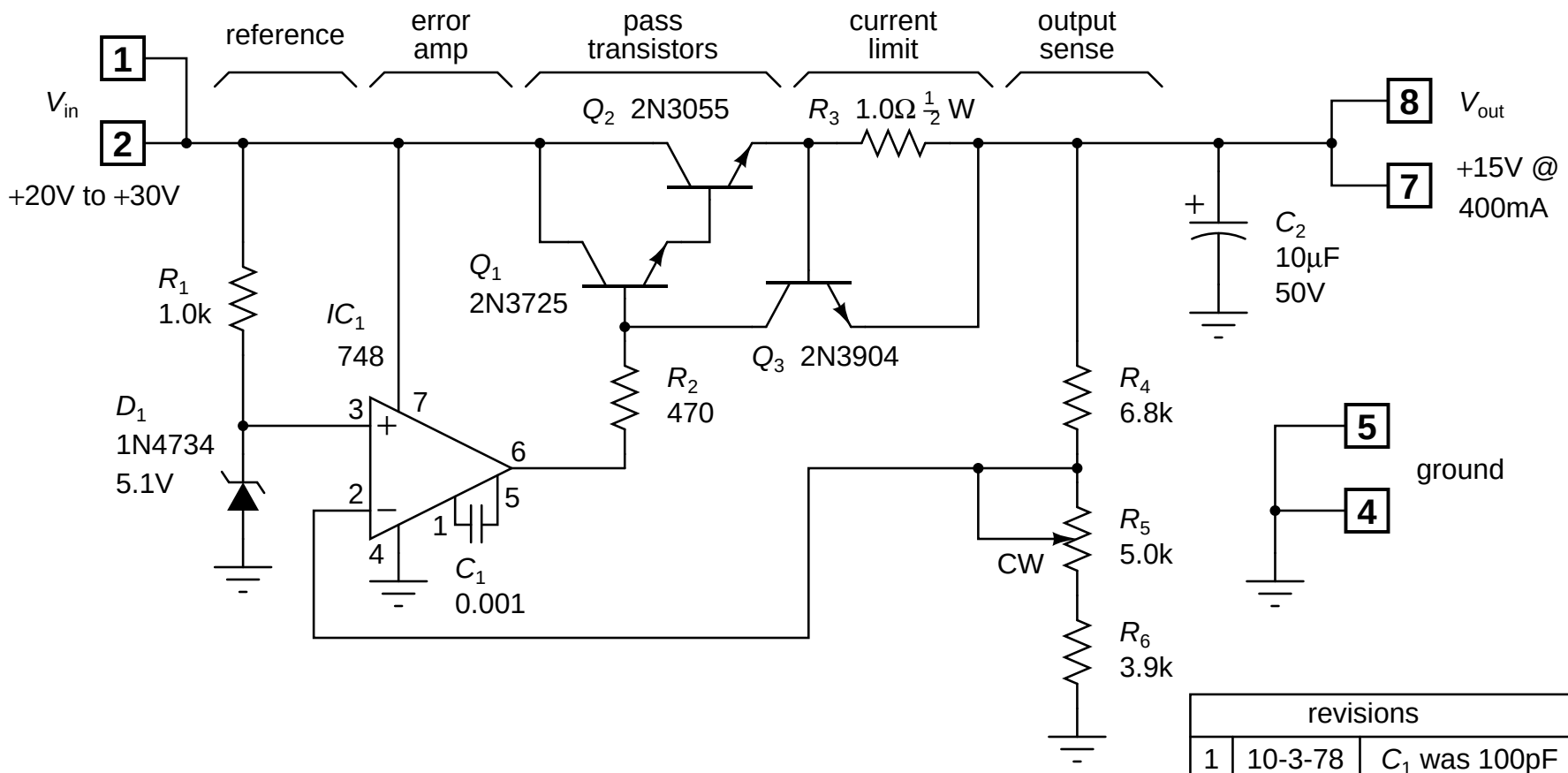

NOTES:

1. Q_2 on Wakefield 421AX heat sink (18W at 600mA short circuit)
2. adjust R_5 for $V_{out} = +15.0 \pm 0.1$V
3. mates with cinch 50–10A–20

revisions		
1	10-3-78	C_1 was 100pF
2		
3		

+15 volt regulator			
drawn by	PH	9-16-78	ASSY NO. PS-15.4
checked by	WH	9-23-78	